Input data

System of measurement		Metric
Input type		Gear motor
Input speed	[rpm]	1400
Output speed	[rpm]	11.33
Ratio (i=)		123.6
Frequency	[Hz]	50
Input options		IEC
Requested input power	[kW]	0.18
Service factor		1.2
Rated Power P1	[kW]	0.21

Output data

Gear unit		**M RA 63/50 PC 10 123.6 63 B14 AC 24 MT 0.18 kW 63 B4 B14 X3 B3**
Type		RA - Worm speed reducers
Input type		M
Size		63/50
Ratio (i=)		123.6
Gearbox ratio		20.00
Pre-stage ratio		6.18
Input flange		B14
Mounting position		B3
Input speed	[rpm]	1400
Output speed	[rpm]	11.33
Rated output torque	[Nm]	95.61
Service Factor		1.2
Efficiency		0.63
Inertia moment	[kgm^2]	0.000023

Gear unit configuration

Output shaft		Hollow output shaft
Fixing		Shaft mounting
Version		PC
Attachment position		10

Output radial and axial loads

Ball bearings output radial load	[N]	3200
Taper bearings output radial load	[N]	4200
Ball bearings output axial load	[N]	640
Taper bearings output axial load	[N]	840

Accessories

Hollow output shaft		AC 24

Electric motor

Size		63 B4
Poles		4
Power	[kW]	0.18

Electric motor configuration

Motor flange		B14
Terminal box position		X3

VARVEL SpA | Via 2 agosto 1980 | Loc. Crespellano, 40053 Valsamoggia (BO) Italy | T +039 051 6721811 | F +039 051 6721825 | varvel@varvel.com

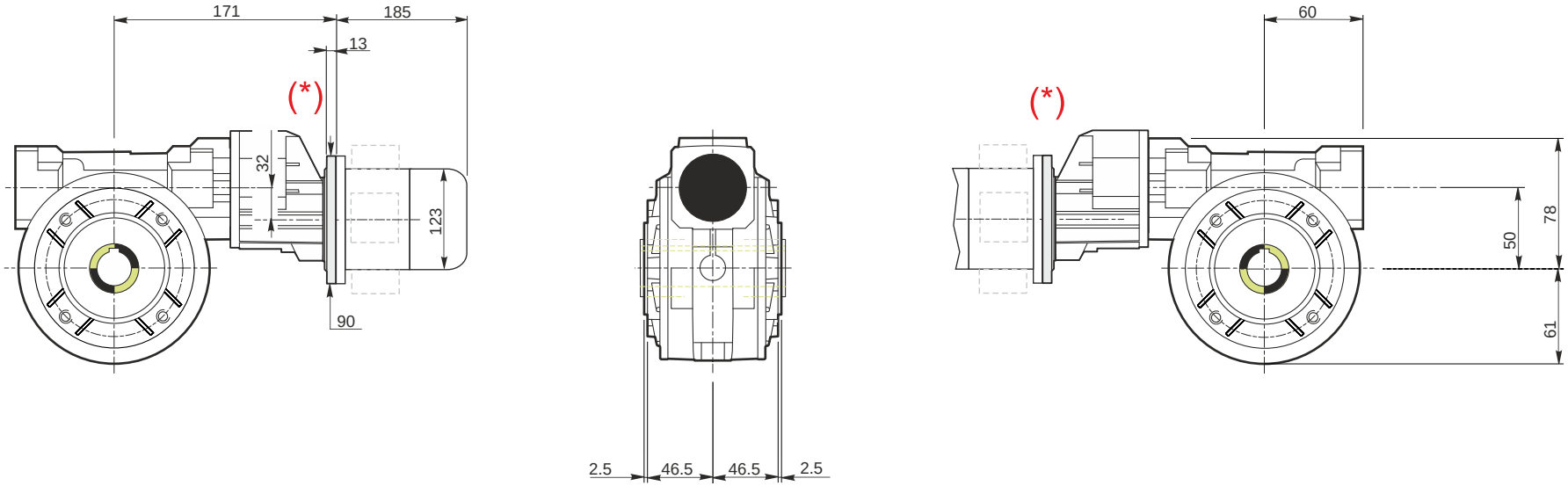

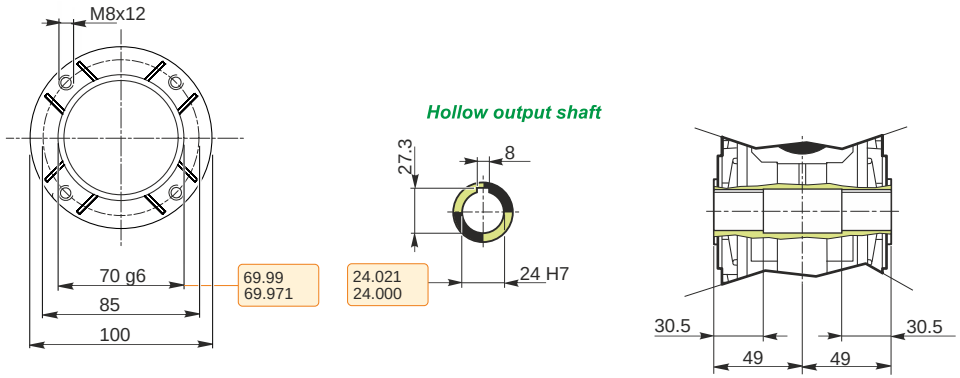

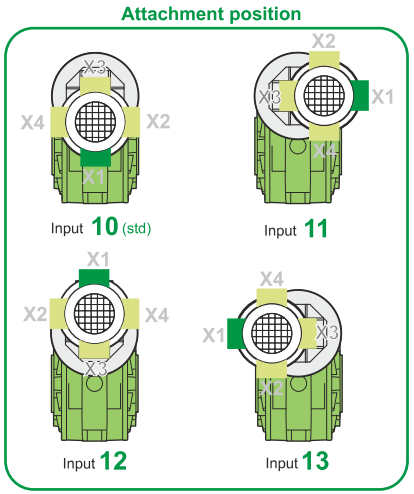

M RA 63/50 PC 10 123.6 63 B14 AC 24 MT 0.18 kW 63 B4 B14 X3 B3

VARVEL SpA | Via 2 agosto 1980 | Loc. Crespellano, 40053 Valsamoggia (BO) Italy | T +039 051 6721811 | F +039 051 6721825 | varvel@varvel.com

Mounting positions

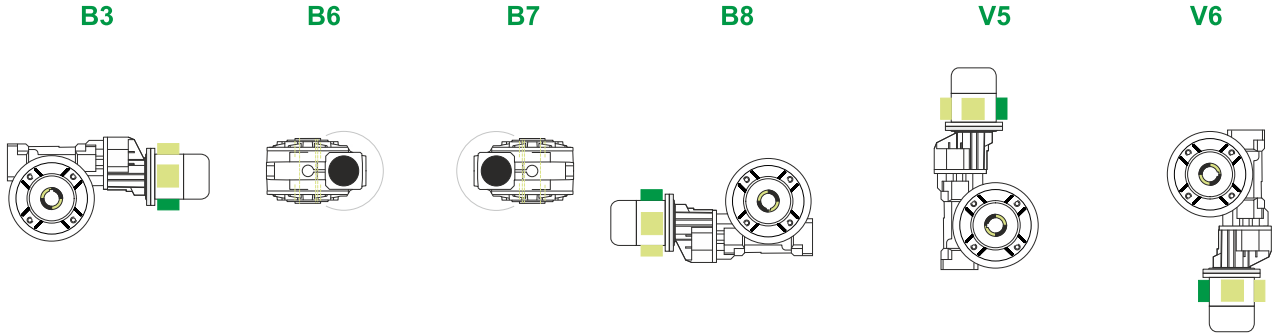

Terminal box position

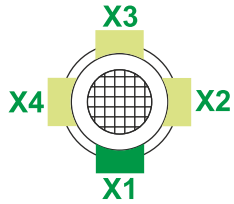

0.04	1
0.13	2

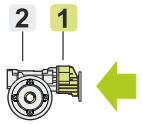

Oil quantity [litres]

Lubricant type: Long life synthetic oil ISO VG320

Direction of rotation

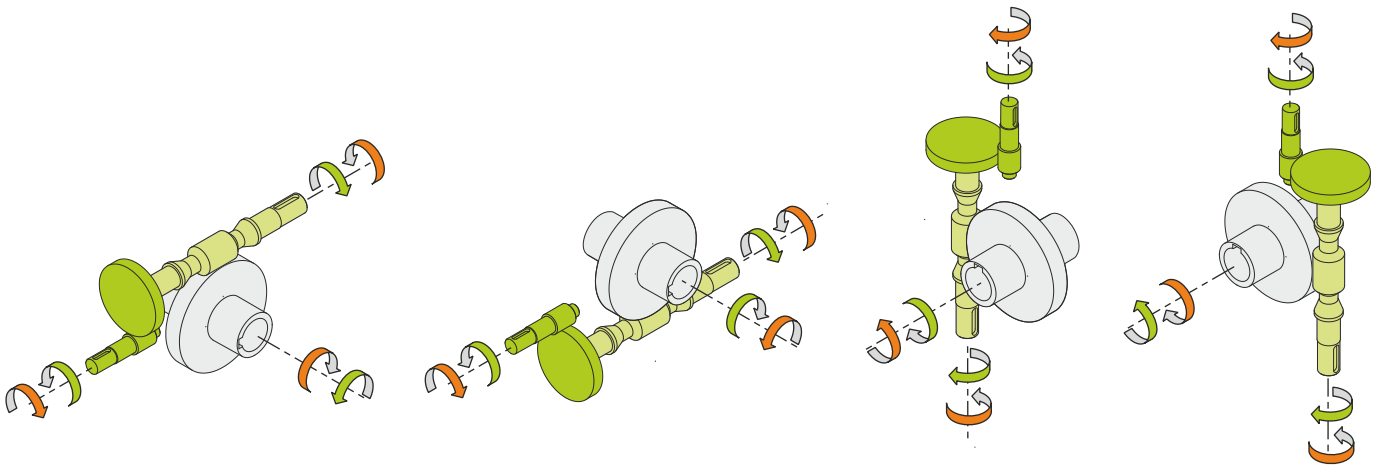

Weight

Gear unit [kg]	5.3
Electric motor [kg]	4.3

Gearing data

Axial module	1.9
Number of starts	2
Lead angle	8° 59’
Pressure angle	20°

Backdriving

Variable static self-locking
Quick back-driving in case of vibrations
Dynamic back-driving

M RA 63/50 PC 10 123.6 63 B14 AC 24 MT 0.18 kW 63 B4 B14 X3 B3

VARVEL SpA | Via 2 agosto 1980 | Loc. Crespellano, 40053 Valsamoggia (BO) Italy | T +039 051 6721811 | F +039 051 6721825 | varvel@varvel.com